UNIOR® 3200/2BI

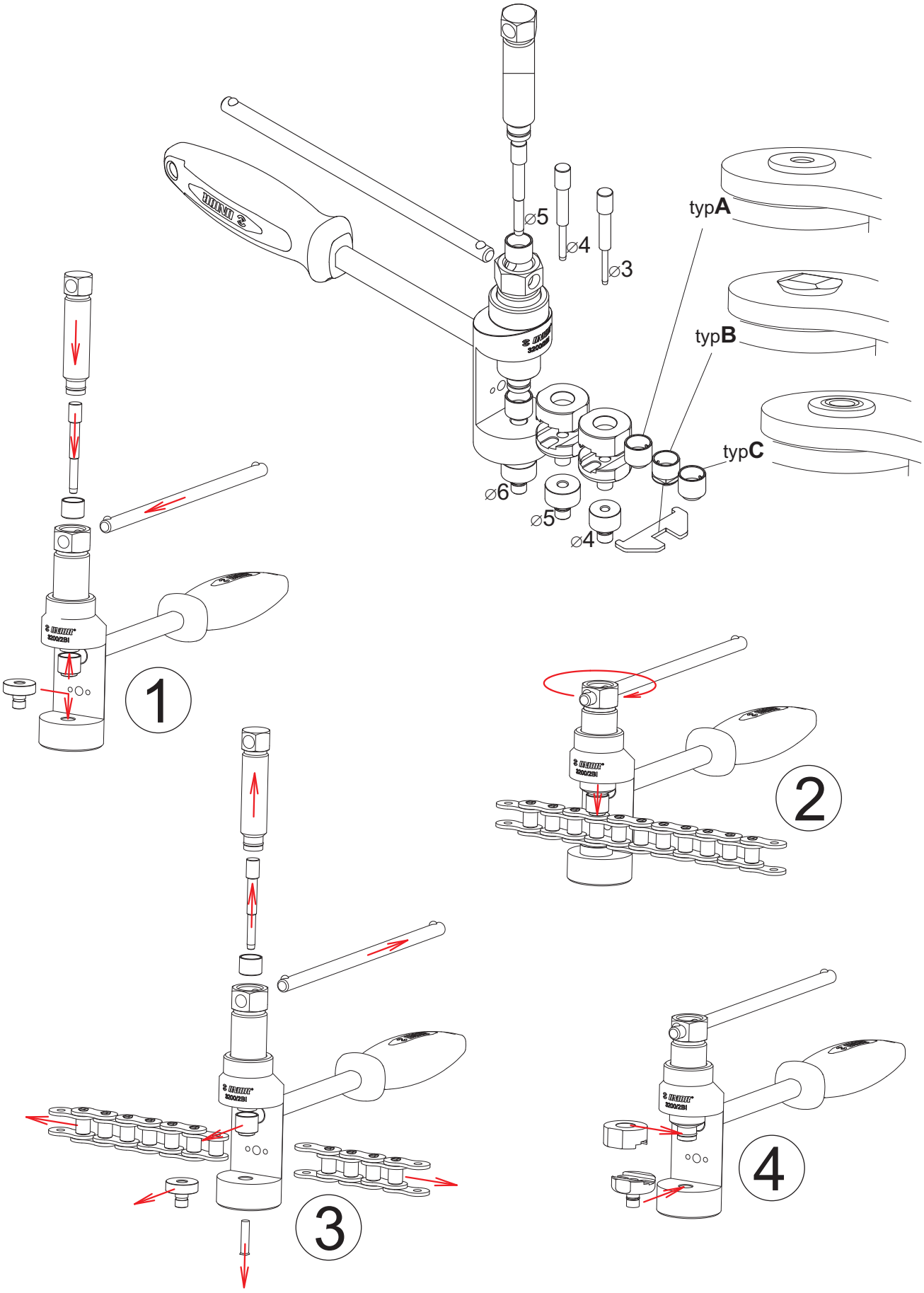

UNIOR d.d., Kovaška c.10, 3214 Zreče, Slovenia
Tel.: +386 (0)3 75 78 100 / Fax: +386 (0)3 57 62 643
E-mail: sales@unior.si www.uniortools.com

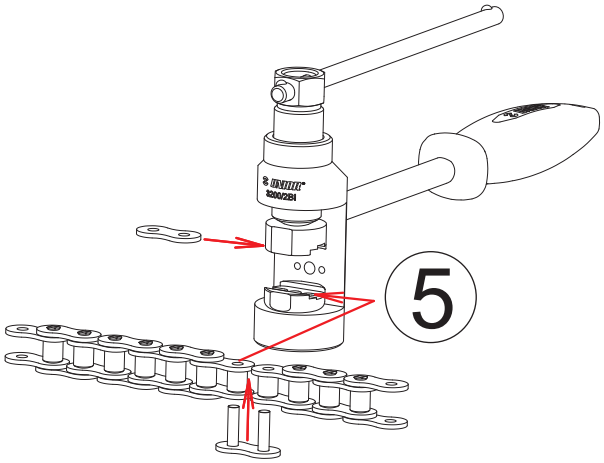
5

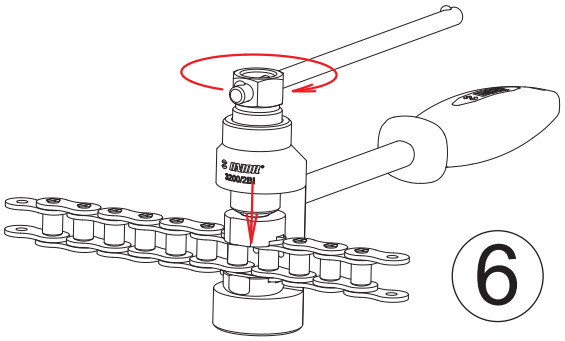
6

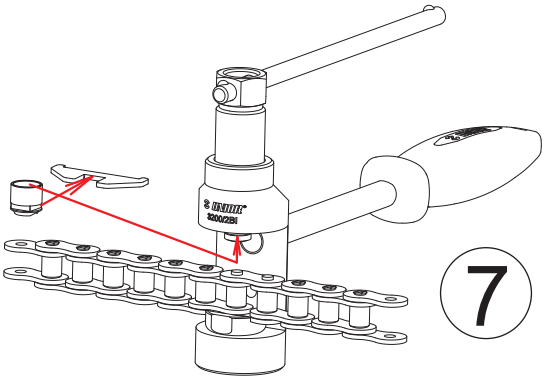
7

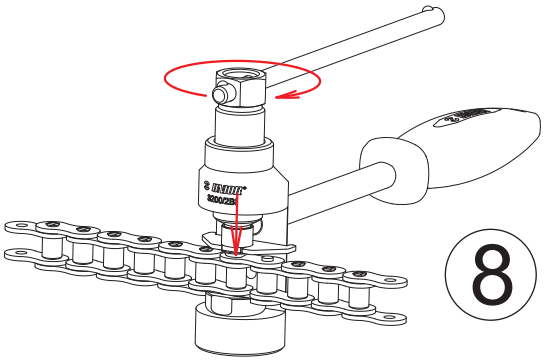
8

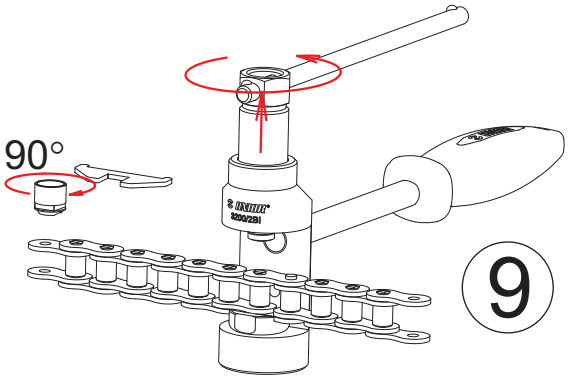
90°
9

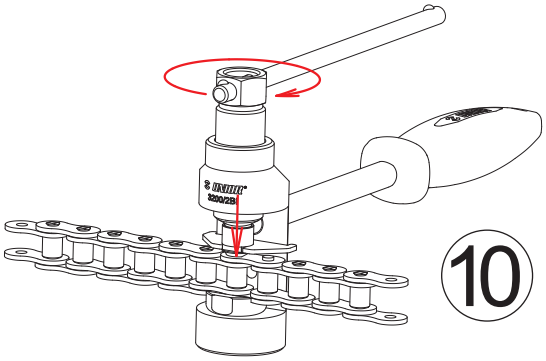
10

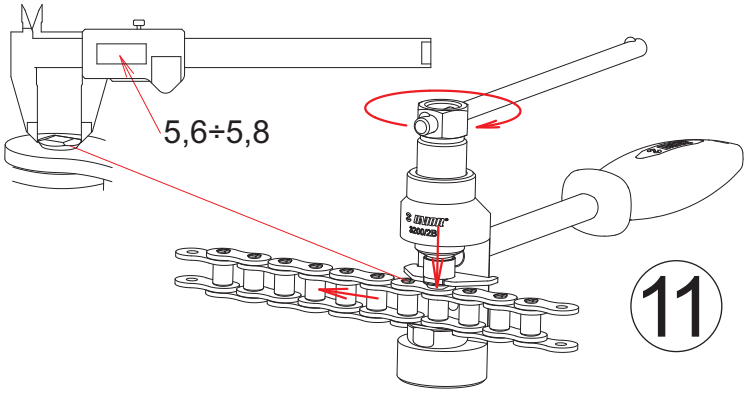
5,6÷5,8
11

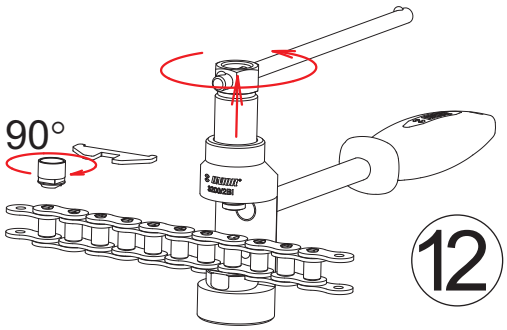
90°
12

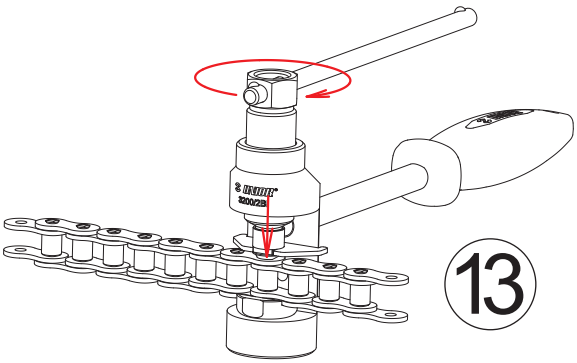
13

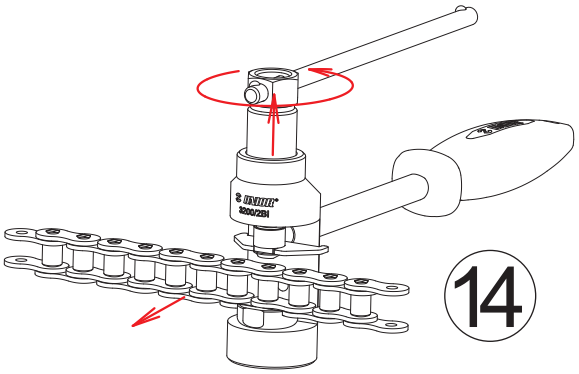
14